High Gradient Operation with the CEBAF Upgrade RF Control System*

C. Hovater#, K. Davis, H. Dong, A. Hofler, L. King, J. Musson, and T. Plawski
Jefferson Lab, Newport News, VA, USA

Abstract

The CEBAF Accelerator at Jefferson Lab is presently a 6 GeV five pass electron accelerator consisting of two superconducting linacs joined by independent magnetic transport arcs. Energy will be upgraded to 12 GeV with the addition of 10 new high gradient cryomodules (17+ MV/m). The higher gradients pose significant challenges beyond what the present analog low level RF (LLRF) control systems can handle reliably; therefore, a new LLRF control system is needed. A prototype system has been developed incorporating a large FPGA and using digital down and up conversion to minimize the need for analog components. The new system is more flexible and less susceptible to drifts and component nonlinearities. Because resonance control is critical to reach high gradients quickly, the new cryomodules will include a piezoelectric tuner for each cavity, and the LLRF controls must incorporate both feedback and feed-forward methods to achieve optimal resonance control performance. This paper discusses development of the new RF system, system performance for phase and amplitude stability and resonance control under Lorentz detuning measured during recent tests on a prototype cryomodule.

INTRODUCTION

Presently, three upgrade cryomodules consisting of a new 7 cell cavity design and incorporating a new Piezo-electric tuning mechanism [1] have been produced. Two of these modules have been tested and installed, one in the CEBAF accelerator and the other in the Jefferson Lab FEL. Initial LLRF testing was done last year in collaboration with Cornell [2]. In these tests digital LLRF control was demonstrated to meet field control requirements up to 12 MV/m. Most recently Jefferson Lab has tested a prototype LLRF system on all three upgrade cryomodules. Stable gradients up 16.7 MV/m were obtained while operating the LLRF control system. In addition, a cavity recovery algorithm was validated that compensated for the Lorentz detuning.

Superconducting cavities present a different set of control parameters than normal conducting cavities. The extremely high external Q's narrow the bandwidth making them susceptible to vibrational microphonics. So, in the steady state, a control system must correct the cavity detuning due to the microphonics. The seven cell CEBAF upgrade cavities have proven to be less susceptible to microphonics than the original five cell cavities, averaging a detuning of 6.1 Hz (6σ) [3]. A more careful mechanical design and the use of coaxial HOM loads versus the waveguide HOM loads used on the older cavities is believed to contribute to the microphonic reduction.

The cavity field regulation is essentially determined by the electron beam energy spread requirements, which are 0.01% and 0.02% at 6 and 12 GeV respectively. For the lower energies (< 6 GeV) these are unchanged from the original specification. This in turn drives the phase and gradient control specifications for the RF system. Presently the maximum uncorrelated errors allowed in the accelerator are 0.5^{o} in phase and 4.45×10^{-4} for amplitude [4].

These requirements must still be met though the control environment for the RF system will be substantially different from that of CEBAF at 6 GeV. One aspect of the control environment is the cavity Q_{ext}. The Q_{ext} has been optimized to ~ 3×10^{7} minimizing the amount of RF power required to achieve the design gradient (20 MV/m) and beam load of 470 μA. The decreased cavity bandwidth has made the microphonics a larger factor than in the original system. Therefore LLRF controls must meet field specification with an expected peak detuning of 10 Hz (corresponding to a vibration-induced microphonics of 3.5 Hz rms and a 2 Hz frequency tuner resolution. Lastly, the increased gradient and external Q have made the Lorentz detuning effect much more pronounced than the original design of 5 MV/m and 6.6×10^{6}. It is expected that the detuning will be more than ten times the cavity bandwidth.

RF System Gains and Bandwidth

Knowing the cavity field regulation and the microphonic detuning, one can calculate the gain needed to control the system. In the simple case the amplitude detuning can be represented by the cos function. Given the allowed amplitude error of 4.45×10^{-4} a curve showing the proportional gain needed to meet field control can be made. Figure 1 shows the proportional gain needed vs. microphonic detuning for a range of Q_{ext}. For the typical upgrade cavity, gains between 40 and 200 are necessary to control microphonics.

From this, one can determine the necessary bandwidth needed by the control system. In the worst case scenario, operating a cavity with a Q_{ext} of 5×10^{7} would require a gain of 200. Given the cavity's bandwidth of ~ 15 Hz and the gain of 200 (46 dB) the zero-gain cross over point on the Bode plot would be ~ 3 KHz. To have adequate phase margin and insure stability one should add at least a decade from the crossover point for a minimal process control bandwidth of 30 kHz (which gives a 50 degree phase margin). This requirement is easily satisfied by today's FPGA based LLRF control systems.

*Notice: Authored by The Southeastern Universities Research Association, Inc. under U.S. DOE Contract No. DE-AC05-84150. The U.S. Government retains a non-exclusive, paid-up, irrevocable, world-wide license to publish or reproduce this manuscript for U.S.

hovater@jlab.org

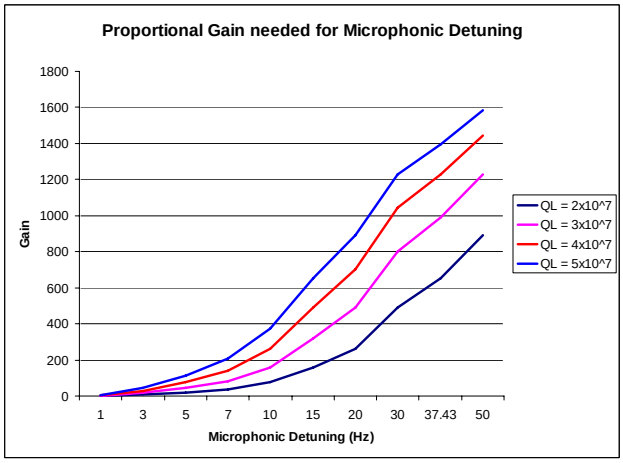

Figure 1 Proportional gain needed to compensate for microphonic detuning

RF SYSTEM

Figure 2 shows a block diagram of the low level RF control system. This architecture has become the standard model for single cavity control LLRF systems, with four RF inputs and two RF outputs utilizing a modern large field programmable gate array (FPGA). The prototype LLRF system is a modified version of the present normal conducting RF controls used in CEBAF [5]. The VME platform was chosen for convenience. EPICS control is provided through an IOC located in the VME crate. The system utilizes a mother - daughter board with the FPGA on the motherboard and the daughterboard hosting the RF hardware and analog to digital converters (ADC) and digital to analog converters (DAC) for both the receiver and transmitter.

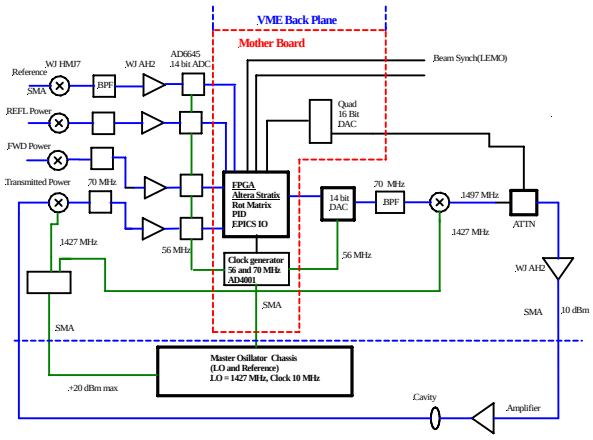

Figure 2: RF system block diagram

The RF system down converts the cavity frequencies (499 MHz and 1497 MHz) to an IF of 70 MHz. This allows us to use the local oscillator (LO) and IF signals that are already distributed around CEBAF. The receiver IF signals are then quadrature demodulated using a clock at 56 MHz. The transmitter output is a single IF output at 70 MHz where the quadrature components are digitally recombined inside the FPGA [6]. The signal is then filtered and up converted to the cavity frequency of 1497 MHz. Both forward and reflected powers are also monitored.

Receiver/Transmitter

FET mixers (WJ HMJ7) were chosen because of their linearity (IP3 ~ 40 dBm) and high dynamic range. The ADCs (AD6645) and a dual DAC (AD 9767) are included on the daughter card. For the transmitter a diode ring mixer is used since the IP3 requirements are not as stringent. The receiver has been modeled and tested in a variety of ways. First a simple spreadsheet was used to look statically at the systems gains, IP3 and SNR and then a more complete model using the commercial software SystemView. In addition critical parts have been tested in an environmental chamber to measure temperature induced phase drifts. This design process has produced an extremely linear receiver.

Motherboard

The motherboard contains the digital electronics necessary to process digital signals to and from the daughterboard, and interface to the VME bus. The board features one Altera Stratix FPGA, 64Kx16 DPRAM, 1Mx32 RAM, 1Mx32 FLASH, Phase Locked Loop (PLL), six 16-bit 500K-sample DACs, 10/100 Ethernet, general purpose digital IO, and infrared input and output. The motherboard uses two 100-pin and two 20-pin stackable connectors to support daughter board (s). Each 100 pin connector has 70 digital I/O, PLL clock output, FPGA clock input, and digital powers. Each 20 pin connector provides VME analog powers (+/-12V, +/-24V).

Digital Signal Processing and Control

The fast digital logic consists of a digital receiver, PID controller, rotation matrices and a digital up converter. The receiver incorporates a 500 kHz CIC filter and 300 kHz 10 tap FIR. Given the calculated gain and bandwidth needed the filter delay is not a stability issue. Phase and amplitude set points are converted to I/Q and then compared to the cavity I/Q signal. In the present state, the control system is a digital generator-driven resonator (GDR), using a basic proportional and integral (PI) algorithm logic for field control [4]. All adjustable parameters such as gain, phase and gradient are embedded in the FPGA and controllable through EPICS. A rotation matrix then aligns the control loop for negative feedback. The processed I/Q signal is then recombined and processed through a digital synthesis process resulting in a 70 MHz IF out of the DAC.

Cavity Resonance Control

As part of the high gradient testing we have developed a prototype software resonance control system for the 12 GeV Upgrade RF cryomodules. The upgrade cavities will be outfitted with mechanical tuners for coarse compensation and piezoelectric tuners for helium pressure drifts and Lorentz detuning compensation during high

gradient turn-on. The resonance control software must provide feedback loops for both types of tuners to provide effective resonance control. The software design is derived from two resonance control systems: Cornell's digital LLRF system under development for its proposed ERL and CESR-c RF systems [2] and the autotrack resonance tacking system used for the CEBAF 6 GeV cavities.

The significant element in the design is a VxWorks task that communicates with the digital LLRF hardware and performs the control calculations. At 1 kHz it acquires I and Q data from the LLRF hardware and computes the cavity detuning angle and cavity field amplitude. An EPICS database interfaces with the task to provide process monitor and control.

The piezoelectric tuner software uses a proportional and integral controller on the computed detuning angle error to derive settings at 200 Hz. The amplitude and detuning angle can be filtered with one of four elliptical infinite impulse response (iir) filters at 0.1, 1, 10, or 100 Hz. Given a minimum cavity field threshold for usable detuning angle data, the software can detect when the cavity has sufficient voltage and initiate piezoelectric tuner actions. This feature can be used to support quick cavity turn-on.

RF TESTS & MEASUREEMNTS

LLRF tests and measurements were made on three different upgrade cryomodules. Initial testing began on the Renascence cryomodule but was limited to gradients of < 7 MV/m. Further testing, with the exclusive purpose of developing the Lorentz compensation algorithm for quick cavity recovery, took place on an upgrade cryomodule in the Jefferson Lab FEL. Finally, high gradient tests were performed on SL21 in the CEBAF accelerator. A CW gradient of 16.7 MV/m was made before a thermal quench tripped the cavity interlock. The resonance software controlling the PZT was used through these measurements to compensate for the Lorentz effects.

Residual phase and amplitude noise was measured using external analyzers and detectors. The phase noise was measured with an Agilent phase noise test set and the Amplitude noise was measured using an external Analog Devices amplitude detector connected to an Agilent dynamic signal analyzer. For all gradients the LLRF system performance was better than the required control specification.

Table 1 Field Control at 16.7 MV/m

	Specification	Measured
Phase	0.5^{o} rms.	0.3^{o} rms.
Amplitude	0.045% rms.	0.03% rms.

Proportional and integral gain measurements were made to verify the simple model and to find the optimum control settings. At reduced gradients, 5 MV/m using just proportional control field stability was easily obtained well beyond the specification. Adding integral control slightly reduced amplitude control but improved phase noise, and as expected eliminated the dc offset from the set point. The optimum proportional gain was between 32 and 64 which compares favorably with the calculated gain needed for field control.

The piezoelectric tuner loop was tested on two different intermediate 12 GeV prototype cavities. FEL03-5 operating from 2 to 7 MV/m in Jefferson Lab's FEL served as the test bed for the piezoelectric loop system during development in the spring of 2006. The system reliably brought the cavity back to zero detuning angle error. A gradient ramping feature was added to the LLRF control module to linearly ramp the cavity from zero to its field set point to facilitate quick turn-on. Using this LLRF feature and the piezoelectric tuner quick turn-on capability, the cavity was ramped from 2 to 7 MV/m in 100 ms. Final testing was performed on SL21-2 where gradient ramps with the LLRF ramp and resonance control succeeded in taking the cavity from 0.3 to 13 MV/m in < one second, Figure 3.

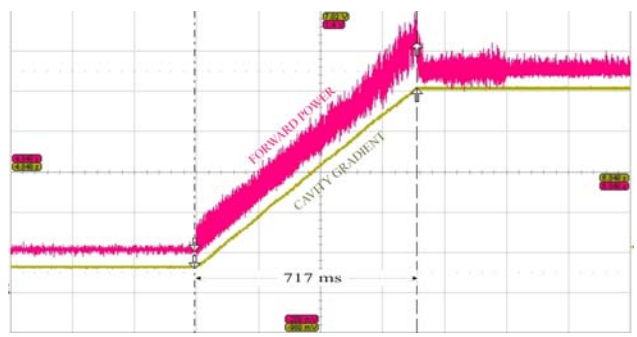

Figure 3 Graph of gradient and forward power as RF is turned on.

SUMMARY

A prototype LLRF system has been tested at gradients, up to 17 MV/m as required for the 12 GeV upgrade. Field Control specifications were easily met. A resonance algorithm that compensates for Lorentz detuning during turn-on was also was successfully tested. Future work includes further hardware refinement using an embedded EPICs IOC and developing a logic-based self-excited loop.

REFERENCES

[1] E. Daly, et al, "Improved Prototype Cryomodule for the CEBAF 12 GeV Upgrade", PAC 2003 Proceedings, Portland OR, USA
[2] M. Liepe et al, "Pushing the Limits: RF Field Control at High Loaded Q", PAC 2005 Proceedings, Knoxville TN, USA
[3] K. Davis and T. Powers, private communication.
[4] C. Hovater et al, JLAB-TN-05-056
[5] C. Hovater el al, "A New RF System for the CEBAF Normal Conducting Cavities" LINAC 2004, Lubeck, Germany
[6] L. Doolittle, LBNL, private communication. http://recycle.lbl.gov/%7Eldoolitt/plan50MHz/.